BLANCO

SINK SPECIFICATIONS

BLANCO PERFORMA™ 1-1/2 BOWL Undermount
Model 440115

FEATURED MODEL

440115 Large, 10" & 7" bowl depths

ADDITIONAL MODELS

440114 Large Reverse, 7" & 10" bowl depths
440101 Small, 9" & 7" bowl depths

FEATURES

- 18 gauge, 304 series stainless steel
- 18/10 chrome/nickel content
- Long-lasting, easy-to-clean, satin polished finish
- Sound deadening pads
- Rear drain placement
- Required outside cabinet: 36″

OPTIONAL ACCESSORIES

Sink Grids: 220576, 220582
Cutting Board: 440156
Colanders: 514015, 222401

CODE/STANDARDS COMPLIANCE

ASME 112.19.3-00
IAPMO/UPC listed

WARRANTY

Blanco America's Stainless Steel sinks feature a LIMITED LIFETIME WARRANTY to be free of all manufacturing defects under normal use. See our complete warranty for details.

While Blanco America endeavors to provide accurate information, all dimensions are nominal, cannot be guaranteed, and are subject to change or cancellation. Blanco America assumes no responsibility for use of superseded or voided specifications.

PRODUCT SPECIFICATION

Undermount large sink to be 1-1/2 bowl design, 31-5/8" in length and 20-1/2" in front-to-back depth. Sink to be made from 18 gauge, 304 series stainless steel, with 18/10 chrome/nickel content and long-lasting, easy-to-clean, satin polished finish. Sink to feature rear drain placement. Sink to be Blanco Model 440115 with left bowl depth of 10" and right bowl depth of 7".

JOB INFORMATION

Job Name: _____

Contact: _____

Date Specified: _____

Specifier: _____

Contractor: _____

MODEL 440115

NOMINAL DIMENSIONS

MODEL	OVERALL	CUTOUT SIZE	BOWL DEPTH LEFT	BOWL DEPTH RIGHT	DRAIN DIAMETER
440115	31-5/8″x 20-1/2″	Template provided with approximate 1/8" reveal	10″	7″	3-1/2″

DXF cutout templates available on our website.

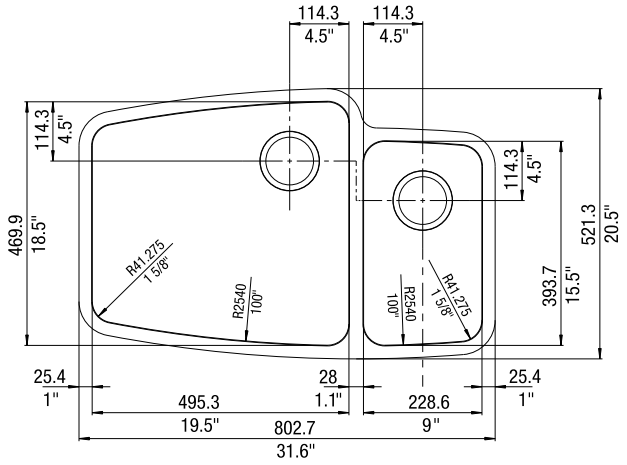

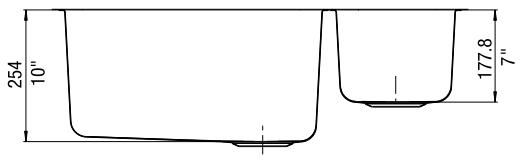

BLANCO AMERICA
800.451.5782
www.blancoamerica.com

© 2013 BLANCO AMERICA